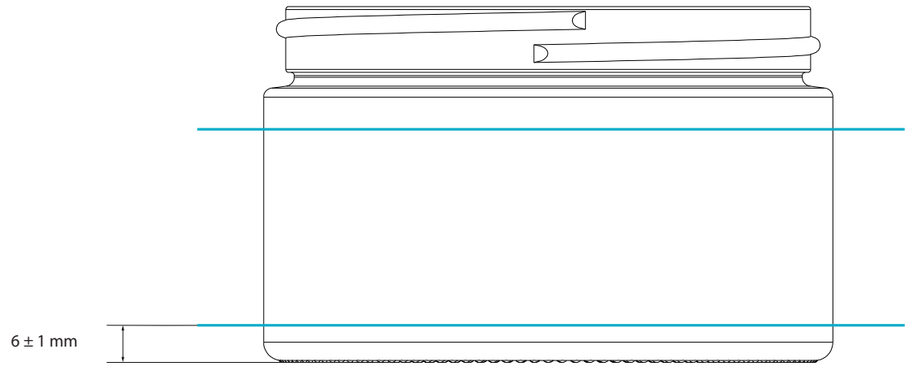

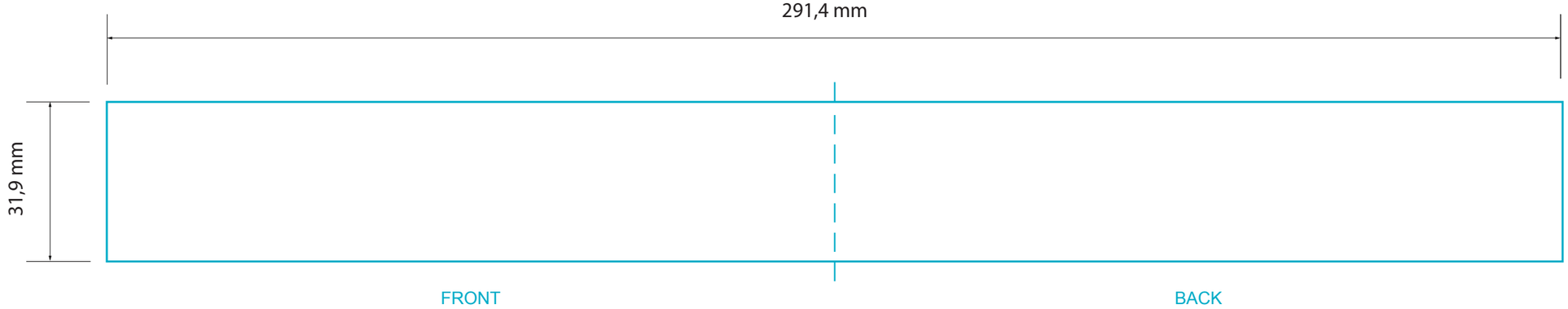

LACQUERING		DECORATION		

DRAWING NUMBER -	**NOTE**		
ORDER NUMBER -			
TYPE OF PRINTING SILKSCREEN	**ITEM TITLE** PURE GLASS JAR 200 ML		**DATE** 05/09/2019
PRINTING SUPPORT TRANSPARENT GLASS	**ITEM CODE** VSV200.0015	**CUSTOMER** -	

www.stocksmetic.com
STOCKSMETIC
PACKAGING
info@stocksmetic.com
+39 0295929880