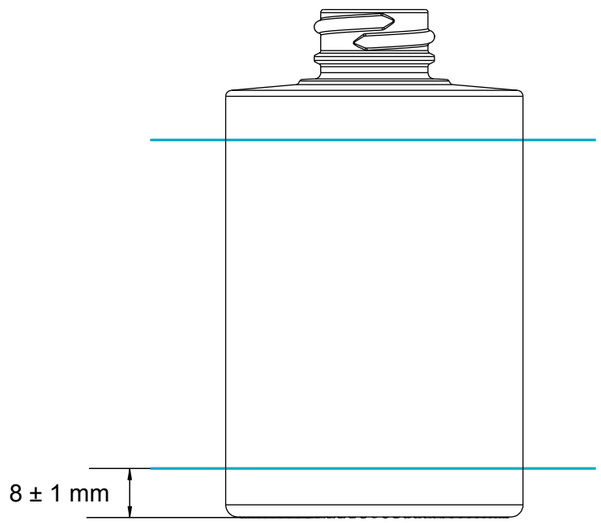

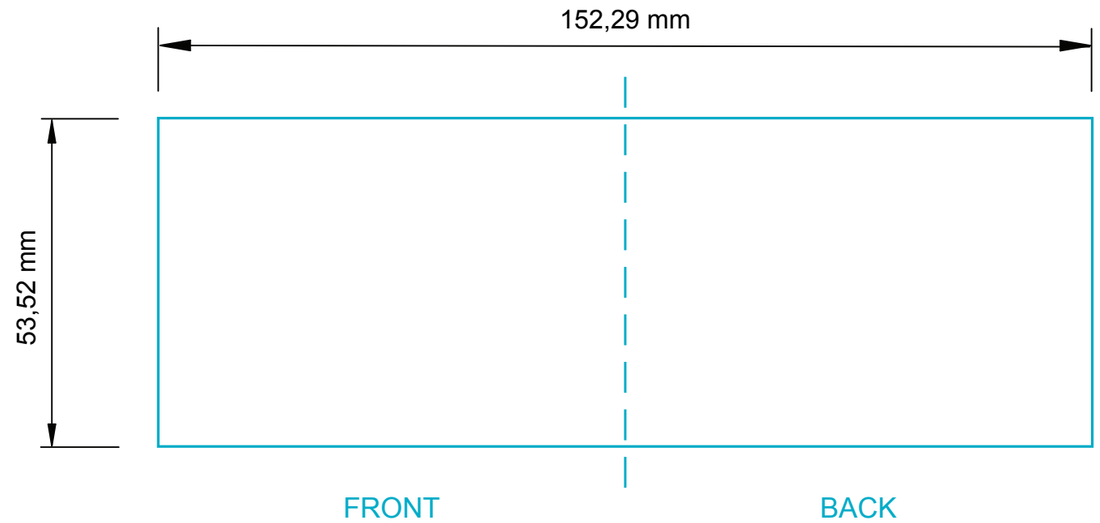

LACQUERING		DECORATION			DRAWING NUMBER	NOTE		
					-			www.stocksmetic.com
					ORDER NUMBER -			STOCKSMETIC PACKAGING
					TYPE OF PRINTING SILKSCREEN	ITEM TITLE HEAVY GLASS BOTTLE 50 ML		DATE 04/09/2019
					PRINTING SUPPORT TRANSPARENT GLASS	ITEM CODE FLV050.6337	CUSTOMER -	info@stocksmetic.com +39 0295929880