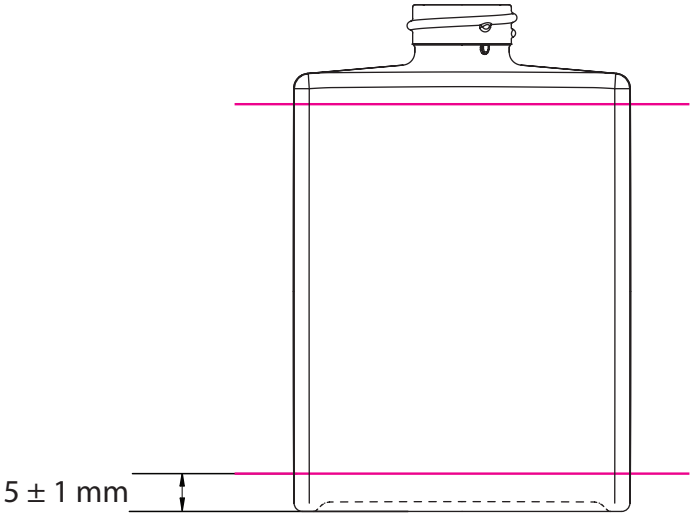

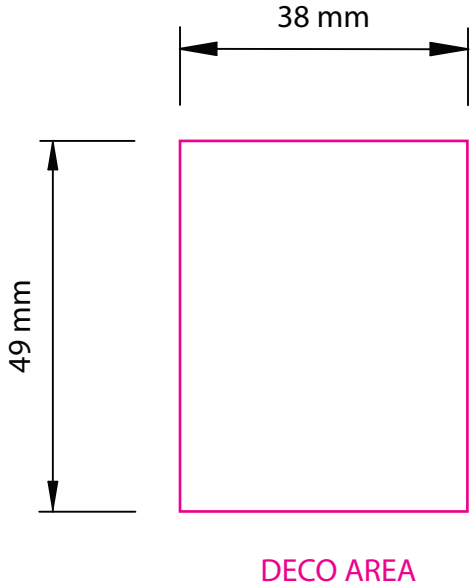

LACQUERING PANTONE	DECORATION PANTONE			DRAWING NUMBER	NOTE		CUSTOMER CONFIRMATION
				AD1015			
				CUSTOMER -			
				TYPE OF PRINTING -	ITEM TITLE HEKO GLASS BOTTLE 30 ML 15.415	DATE 18/03/2024	
				PRINTING SUPPORT -	RAW CODE -	ITEM CODE -	CUSTOMER CODE -

PREMI INDUSTRIES

www.premispa.com

REPRODUCTION AND IMPLEMENTATION OF THE PROJECT HERE AND EXTENDED SUBJECT TO THE EXSPRESS WRITTEN PERMISSION OF THE AUTHOR