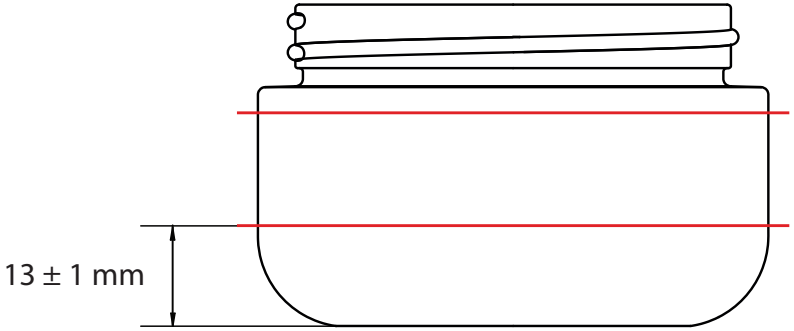

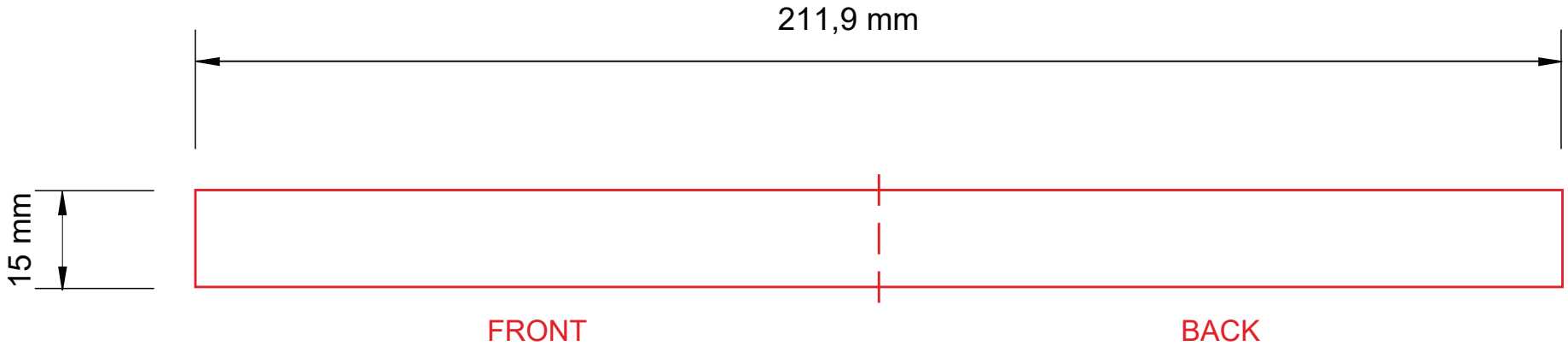

LACQUERING	DECORATION			DRAWING NUMBER	NOTE		
				-			
				ORDER NUMBER			
				-			
				TYPE OF PRINTING	ITEM TITLE		DATE
				-	EGO GLASS JAR 50 ML		-
				PRINTING SUPPORT	RAW CODE	ITEM CODE	CUSTOMER
				TRANSPARENT GLASS	-	-	-

www.stocksmetic.com
STOCKSMETIC PACKAGING
support@stocksmetic.com
+39 02.95929880

REPRODUCTION AND IMPLEMENTATION OF THE PROJECT HERE AND EXTENDED SUBJECT TO THE EXSPRESS WRITTEN PERMISSION OF THE AUTHOR