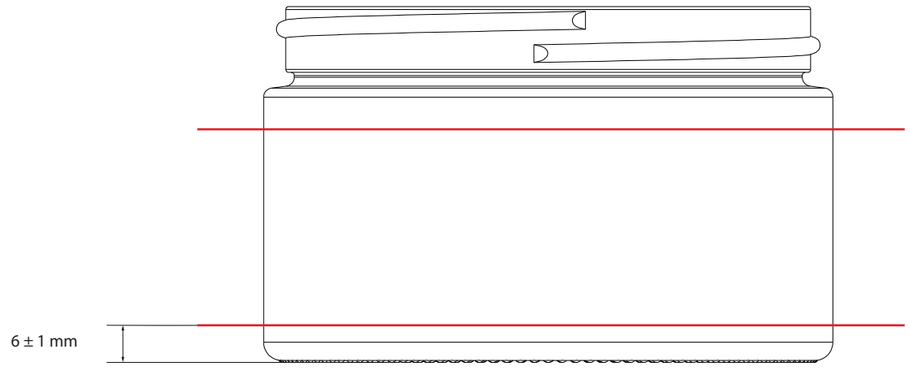

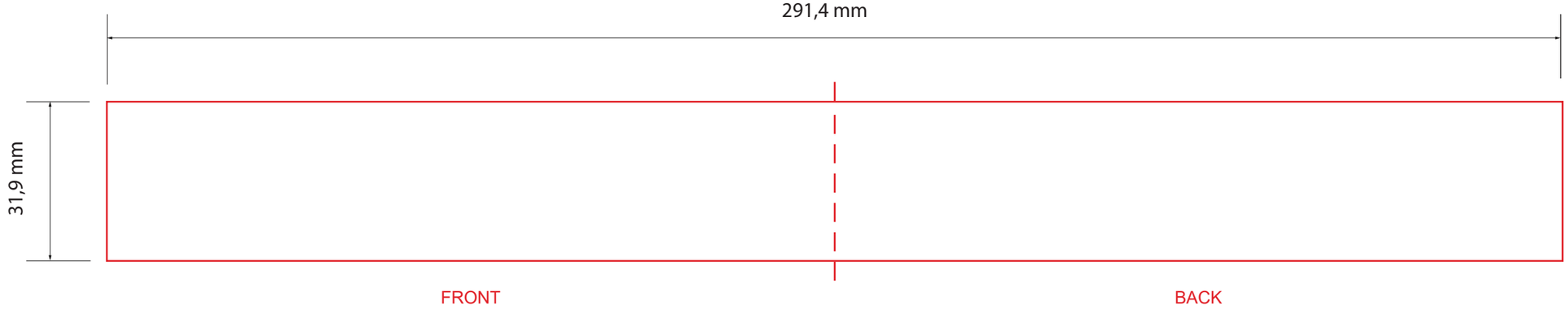

LACQUERING	DECORATION			DRAWING NUMBER	NOTE		
				-			
				ORDER NUMBER -			
				TYPE OF PRINTING -	ITEM TITLE PURE GLASS JAR 200 ML		DATE -
				PRINTING SUPPORT TRANSPARENT GLASS	RAW CODE -	ITEM CODE -	CUSTOMER -

www.stocksmetic.com
berlin PACKAGING
STOCKSMETIC PACKAGING
support@stocksmetic.com
+39 02.95929880

REPRODUCTION AND IMPLEMENTATION OF THE PROJECT HERE AND EXTENDED SUBJECT TO THE EXSPRESS WRITTEN PERMISSION OF THE AUTHOR